Product data sheet
Characteristics

SSLZRA1
Harmony Solid State Relays, Socket equipped with LED and protection circuit, for SSL relays, spring terminals, 5 24V DC

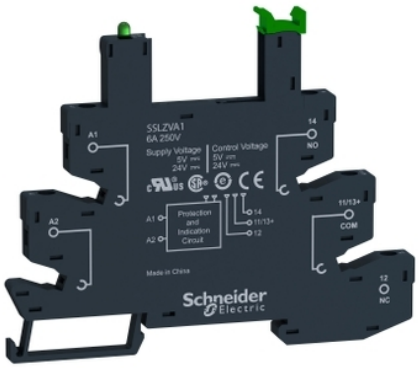

Main

Range of product	Harmony Solid State Relays
Device short name	SSLZ
Product or component type	Socket for SSL1
Product compatibility	Solid state relay SSL with NO contact at 24 V DC Solid state relay SSL with NO contact at 5 V DC
[Ith] conventional free air thermal current	6 A
Switching voltage	5 V DC 24 V DC
[Ue] rated operational voltage	< 250 V DC

Complementary

Shape of pin	Flat
Contact terminal arrangement	Separate
Connections - terminals	Spring terminals, 1 x 0.2...1 x 1.5 mm² (AWG 24...AWG 16) solid without cable end Spring terminals, 1 x 0.2...1 x 1.5 mm² (AWG 24...AWG 16) flexible with cable end
Clamping force	10…40 N
Fixing mode	Clip-on (35 mm DIN rail)
[Uimp] rated impulse withstand voltage	3.6 kV
Overvoltage category	III
Pollution degree	3
Sale per indivisible quantity	10
Local signalling	LED (green) for input status
Width	6.2 mm
Height	101 mm
Depth	78.6 mm
Net weight	0.0285 kg

Environment

Standards	IEC 61984
Product certifications	UL 508[RETURN]CSA C22-2 No 14
Marking	CE
Ambient air temperature for storage	-40…85 °C
Ambient air temperature for operation	-40…70 °C
IP degree of protection	IP20
Flame retardance	V0 conforming to UL 94

The information provided in this documentation contains general descriptions and/or technical characteristics of the performance of the products contained herein.
This documentation is not intended as a substitute for and is not to be used for determining suitability or reliability of these products for specific user applications.
It is the duty of any such user or integrator to perform the appropriate and complete risk analysis, evaluation and testing of the products with respect to the relevant specific application or use thereof.
Neither Schneider Electric Industries SAS nor any of its affiliates or subsidiaries shall be responsible or liable for misuse of the information contained herein.

Packing Units

Unit Type of Package 1	PCE
Number of Units in Package 1	1
Package 1 Height	0.6 cm
Package 1 Width	7.9 cm
Package 1 Length	9.6 cm
Package 1 Weight	23.5 g
Unit Type of Package 2	BB1
Number of Units in Package 2	10
Package 2 Height	7.1 cm
Package 2 Width	8.5 cm
Package 2 Length	10.7 cm
Package 2 Weight	0.263 kg
Unit Type of Package 3	S03
Number of Units in Package 3	300
Package 3 Height	30.0 cm
Package 3 Width	30.0 cm
Package 3 Length	40.0 cm
Package 3 Weight	9.3 kg

Offer Sustainability

Sustainable offer status	Green Premium product
REACh Regulation	REACh Declaration
REACh free of SVHC	Yes
EU RoHS Directive	Pro-active compliance (Product out of EU RoHS legal scope) EU RoHS Declaration
Toxic heavy metal free	Yes
Mercury free	Yes
China RoHS Regulation	China RoHS Declaration
RoHS exemption information	Yes
Environmental Disclosure	Product Environmental Profile
Circularity Profile	End Of Life Information

SSLZRA1

Dimensions

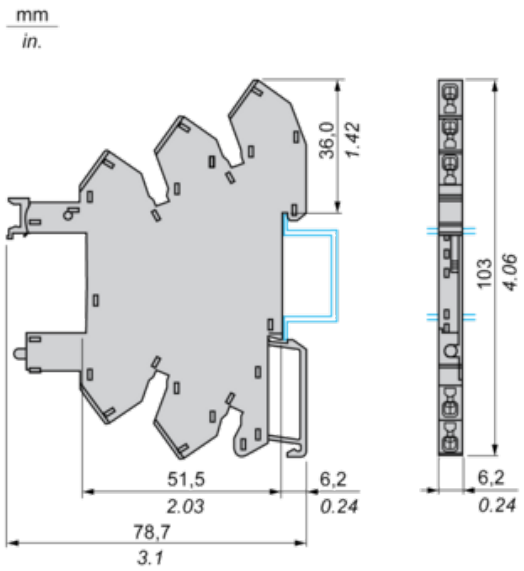

Wiring Diagram

Wiring Diagram for DC Output

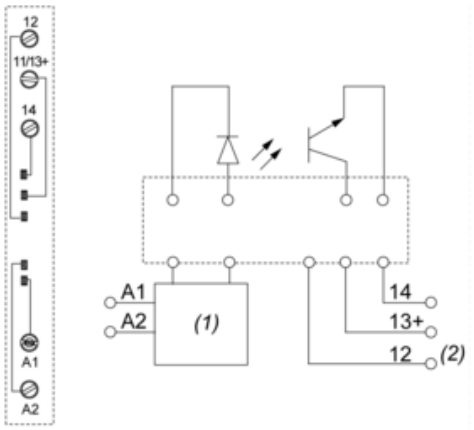

(1) Protection circuit

(2) Terminal 12 is not in use for SSL Relay

Example of RSLZ2 Bus Jumper Mounting on Sockets

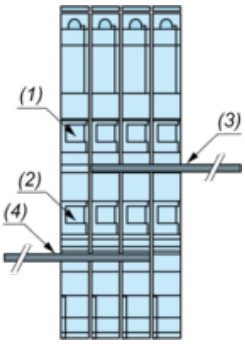

(1) A1

(2) A2

(3) Bus jumper polarity A1

(4) Bus jumper polarity A2