Product data sheet
Characteristics

BMEAHO0412
analog isolated high level output module, Modicon X80, 4 HART outputs, 4 to 20mA

Main

Range of product	Modicon X80
Product or component type	Analog output module

Complementary

Application specific I/O	HART
Product compatibility	BMEP58... processor BMEXBP... backplane ABE7CPA21 Head module BMECRA31210 BMXFTB20... terminal block
Electrical connection	20 ways terminal block Telefast
Isolation between channels	Isolated
Measurement error	0.1 % of full scale 25 °C 0.2 % of full scale 0...60 °C
Temperature drift	45 ppm/°C
Isolation voltage	1000 V DC for 60 s between channels 1400 V DC for 60 s between channels and ground 1400 V DC for 60 s between channels and bus
Checks	Broken wire detection
Load impedance ohmic	600 Ohm 0...20 mA 570 Ohm 0...21 mA
Analogue output number	4
Analogue output type	Current: 4...20 mA
Analogue output resolution	15 bits + sign
Topology	Point-to-point
Function available	I/O mapping
Net weight	0.223 kg

Environment

Ambient air temperature for operation	0…60 °C
Directives	2014/35/EU - low voltage directive 2014/30/EU - electromagnetic compatibility
Product certifications	CE[RETURN]RCM[RETURN]CSA[RETURN]EAC[RETURN]Merchant Navy[RETURN]UL
Standards	EN/IEC 61010-2-201 EN/IEC 61131-2 UL 61010-2-201 CSA C22.2 No 61010-2-201

The information provided in this documentation contains general descriptions and/or technical characteristics of the performance of the products contained herein.
This documentation is not intended as a substitute for and is not to be used for determining suitability or reliability of these products for specific user applications.
It is the duty of any such user or integrator to perform the appropriate and complete risk analysis, evaluation and testing of the products with respect to the relevant specific application or use thereof.
Neither Schneider Electric Industries SAS nor any of its affiliates or subsidiaries shall be responsible or liable for misuse of the information contained herein.

Packing Units

Unit Type of Package 1	PCE
Number of Units in Package 1	1
Package 1 Height	5.500 cm
Package 1 Width	11.100 cm
Package 1 Length	11.800 cm
Package 1 Weight	216.000 g
Unit Type of Package 2	S02
Number of Units in Package 2	15
Package 2 Height	15.000 cm
Package 2 Width	30.000 cm
Package 2 Length	40.000 cm
Package 2 Weight	3.571 kg

Offer Sustainability

EU RoHS Directive	Pro-active compliance (Product out of EU RoHS legal scope)
Mercury free	Yes
China RoHS Regulation	China RoHS Declaration
Environmental Disclosure	Product Environmental Profile
Circularity Profile	End Of Life Information
WEEE	The product must be disposed on European Union markets following specific waste collection and never end up in rubbish bins
California proposition 65	WARNING: This product can expose you to chemicals including: Lead and lead compounds, which is known to the State of California to cause cancer and birth defects or other reproductive harm. For more information go to www.P65Warnings.ca.gov

BMEAHO0412

Modules Mounted on Racks

Dimensions

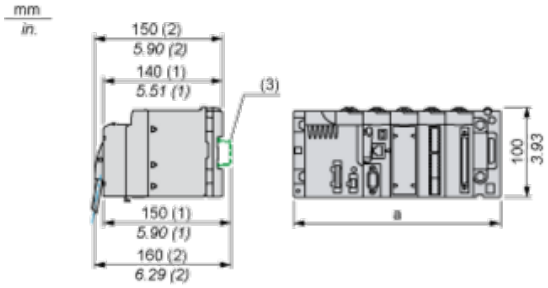

(1) with removable terminal block (cage, screw or spring)

(2) with FCN connector

(3) on AM1 ED rail: 35 mm wide, 15 mm deep. Only possible with BMEXBP0400/0400H/0800/0800H/1200/1200H rack.

	a (in mm)	a (in in.)
BMEXBP0400 and BMEXBP0400H	242.4	09.54
BMEXBP0800 and BMEXBP0800H	372.8	14.68
BMEXBP1200 and BMEXBP1200H	503.2	19.81

Module Connection

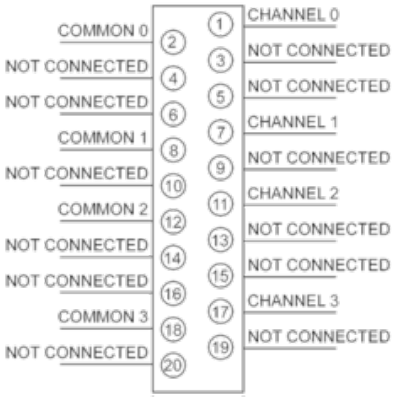

Output Circuit Diagram

With 2-Wire or 4-Wire Transmitter

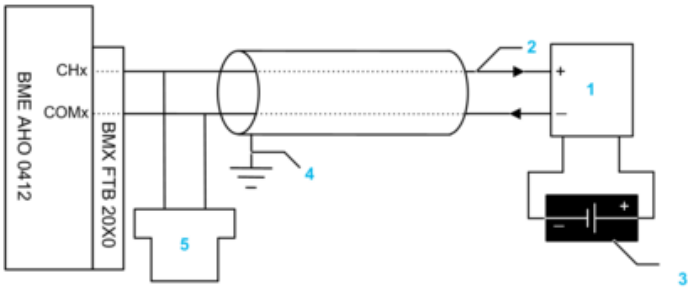

1 2-wire or 4-wire transmitter
2 4-20 mA current loop, with arrows indicating direction of current flow
3 Field power supply (for 4-wire design only)
4 Protective ground
5 Secondary HART master (hand-held)

With 2-Wire or 4-Wire Transmitter, TELEFAST Connector

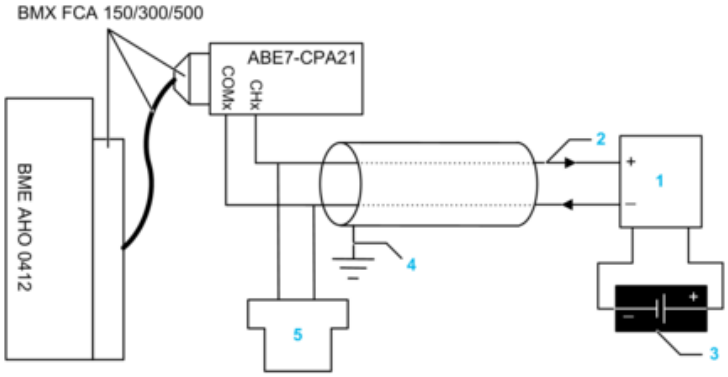

1 2-wire or 4-wire transmitter
2 4-20 mA current loop, with arrows indicating direction of current flow
3 Field power supply (for 4-wire design only)
4 Protective ground
5 Secondary HART master (hand-held)